SYM	DESCRIPTION	DRAWN	APPROVE	DATE
C1	REV WAS B	SKYEG	CRAIGR	2022-08-31
C2	CENTRED INSERTS			

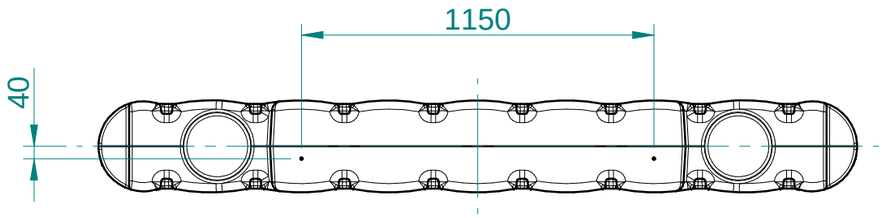

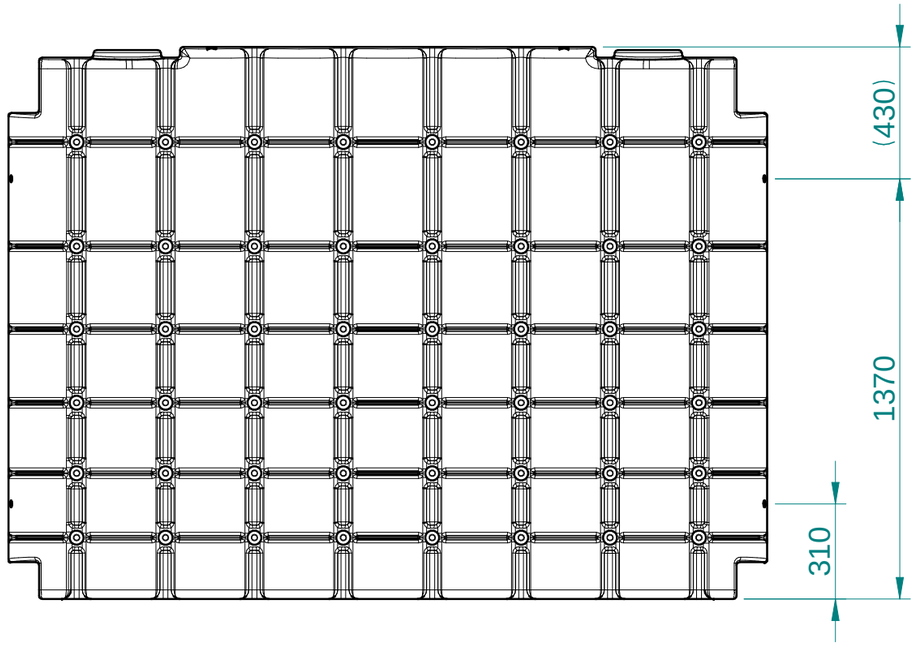

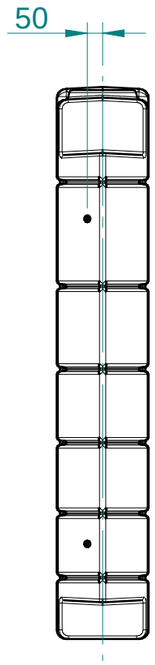

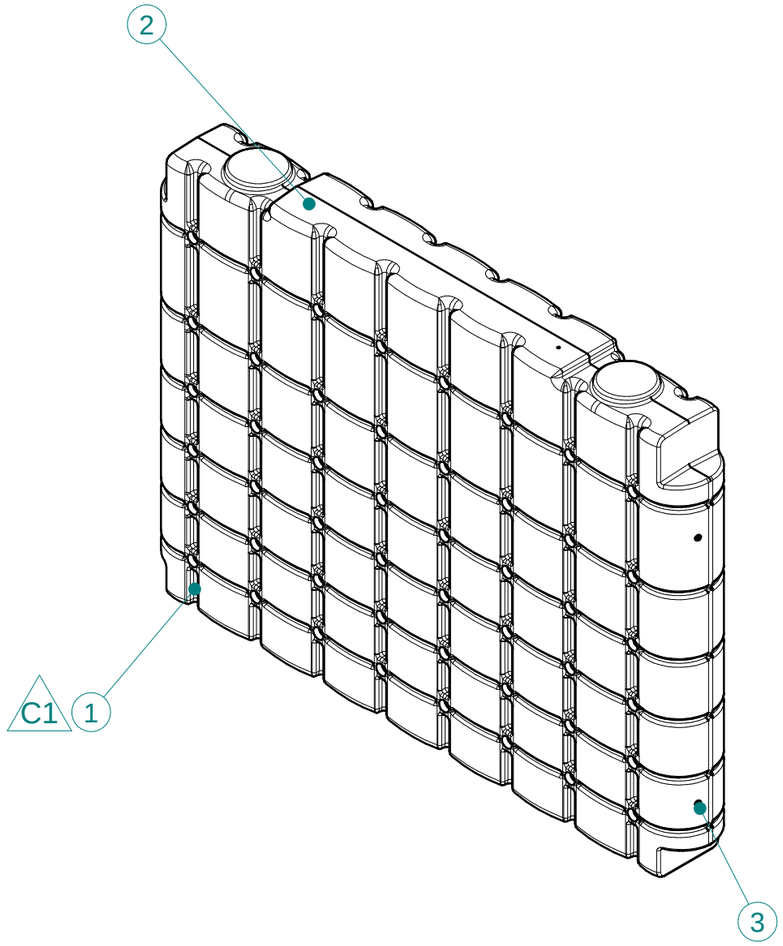

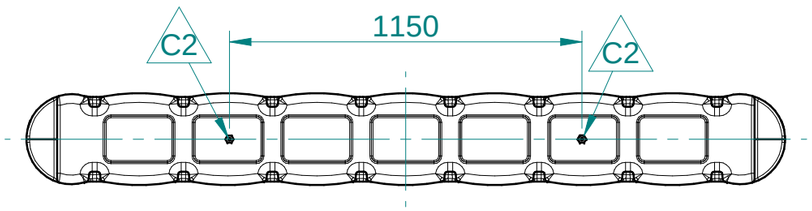

ITEM	PART NUMBER	REV.	DESCRIPTION	MATERIAL	QTY
1	192-002-00-03-001_C	C	WATER TANK 1000L	VP319	1
2	192-INSERT1_A	A	INSERT 1	BRASS	4
3	192-INSERT2_A	A	INSERT 2	BRASS	4

DESIGN:	SKYEGRUT	CAD: SE	SHEET: 1 / 1	SIZE: A3	SCALE: 1:20	MASS: 107.1 kg	REV: C
DETAIL:	SKYEGRUT	TITLE: WATER TANK 1000L W INSERTS				
UNLESS OTHERWISE SPECIFIED						
MATERIAL:	N/A	DWG NO. 192-002-00-03				
HARDNESS:	N/A					
SURFACE FINISH:	N/A	CLIENT: -				
LINEAR DIMENSIONS:	0.0 - 100 ± 0.1 100 - 250 ± 0.2 250 + ± 0.3	3RD ANGLE PROJ DIMENSIONS ARE IN MILLIMETRES				
ANGULAR DIMENSIONS: ± 0.5°						

3D hub Inventive product design and engineering
e info@3dhub.co.nz
p +64 9 300 5455
w www.3dhub.co.nz

© 3D HUB LTD 2022. This drawing is confidential and may not be copied without the written consent of 3D HUB LTD